RECENT AIRSHIP AND AEROPLANE EXPERIMENTS IN EUROPE.

BY THE PARIS CORRESPONDENT OF THE SCIENTIFIC AMERICAN.

The new Lebaudy airship "La Patrie" is making its first flights. The craft is the second airship of the fleet which the French War Department is having built and which will be located permanently at certain fortified posts, especially near the eastern frontier, where they can be at once called upon for service in case of an invasion. Designed somewhat on the same general lines as the "Lebaudy," which is the first airship of the series built by the Lebaudy brothers, it differs from it in some particulars. The shape of the balloon body is about the same, following engineer Julliot's designs for the long body with the beak-like prow and tail, also keeping the flat, oval, canvas-covered frame, which is attached directly to the gas bag and serves as an aeroplane. In the present airship the form approaches more nearly the cigar shape, the rear end being rounded off to a greater extent and provided with canvas frames placed at right angles so as to keep the craft in proper longitudinal trim. As will be noticed, the design of the rudder is considerably different from the former plan. One of the views shows a rear view of the car, which is of the characteristic form. What is remarkable is the small size of the car in proportion to the gas bag, for it measures not much over one-tenth of its length. The propellers are attached by a frame of steel rods to the car. There are two propellers, one on each side, the bearing being supported at the outer end of the frame, while the motor shaft passes out at the sides of the car and is connected to the propeller through bevel gears. Below the car is a tapered frame of steel tubes which serves to support the whole airship on the ground or to take up the shocks when the balloon alights. In this frame is mounted a gasoline tank of large capacity. A large exhaust pipe runs from the motor and curves below the car, where it ends in a muffler. In the present airship the flat plane which forms part of the under side of the balloon is placed much nearer the front end, and the car is not suspended from the middle of this frame, but rather toward its rear. Under the flat frame is mounted a keel-like vertical web which serves to give steadiness. Back of the frame is a rudder of elaborate design. It consists of a fixed canvas-covered part which is attached under the balloon by cords and has a cross-shaped section. At the end of this frame is attached a vertical movable rudder which is pivoted near the center and can be worked from the car cords. The two sets of steadying frames under the balloon and the set at the end of the body no doubt account for the airship's stability.

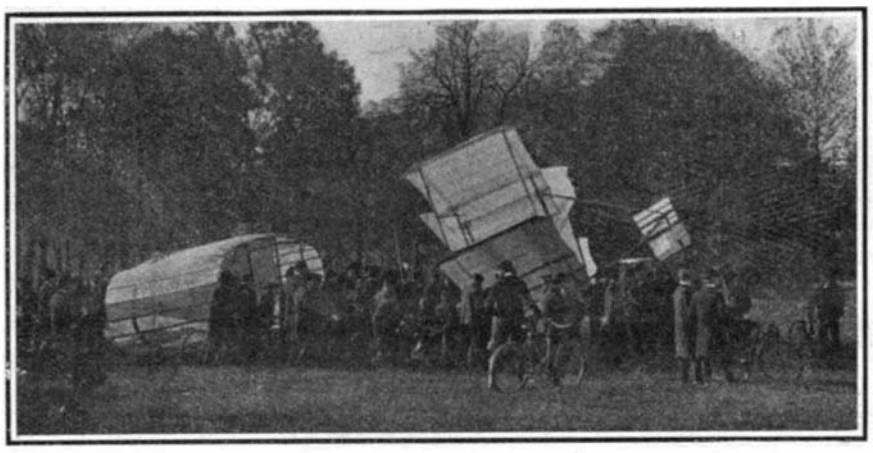

The Bleriot Aeroplane After the Accident.

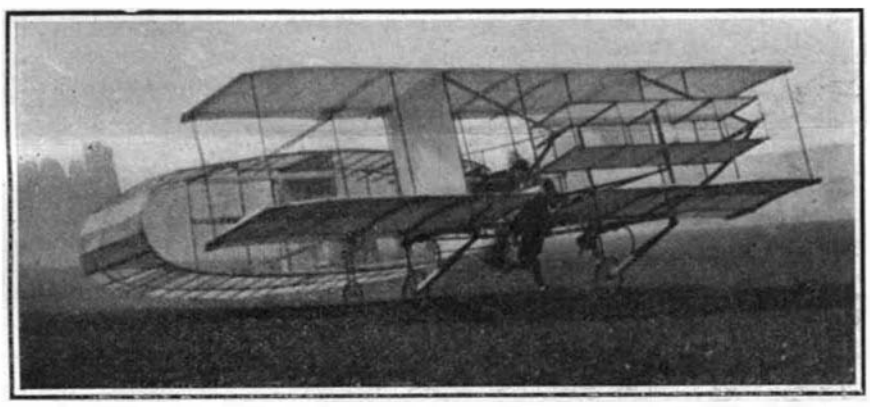

The Bleriot Aeroplane Running Along the Ground Before the Accident.

Among the minor improvements with which the "Patrie" is equipped we may mention an electric bell which rings whenever the gas pressure in the bag reaches the maximum. The envelope has been reinforced to obtain greater impermeability, with the result that the bag will remain inflated for ninety days. The maximum effective lifting capacity is 1,260 kilos (2,772 pounds), so that the airship, besides fuel for ten hours, can carry a crew of three and about 850 kilos (1,870 pounds) of ballast, or a crew of seven and 550 kilos (1,210 pounds) of ballast.

The "Patrie" made its first flight on the 16th of November over the flat ground, around the shed, under the direction of Georges Juchmès, who piloted the first "Lebaudy" so successfully. At 8:20 A. M. the airship was taken out of the shed and brought to the starting point by the corps of military aeronautic aids. The weather was fine, with a light breeze blowing. In the nacelle were Capt. Voyer, delegated by the Minister; Lieut. Bois, who is to pilot the airship when it enters the army service; the mechanic Deguffroy, besides the pilot Juchmès, his mechanic, Rey, and the aid Debrul. Set free at 9:20 A. M., the airship passed to a point near the Seine and then turned about by a fine maneuver, coming back to the plain, running at high speed and in a straight line, and after different evolutions it stopped at 10 o'clock at the starting point, after which the aids returned it to the shed. An altitude of 600 feet was maintained.

The next trial took place on the 22d of November. In spite of the unfavorable weather with a rather stiff breeze and fine rain, the army commission who were to test and receive the airship decided to make a trip on that day over the plain of Moisson. The result was a great success. The aeronauts' report of the trip is as follows: "Cloudy weather, with wind from the southwest which was strong in the air but light near the ground. Starting from the shed at 8 o'clock A. M., tests were made of the motor and propellers at different speeds from 8:50 to 9:10. The balloon was brought by hand to the usual starting point on the plain. It had six men in the nacelle, the same crew as above, with the mechanic Landrin replacing Capt. Voyer. Let loose at 9:32, the airship rose up and came to a balance at a height of 250 feet. As soon as the propellers were started, it headed against the wind and succeeded in traveling very well in this manner. Evolutions were made during thirty minutes under the direction of Lieut. Bois, who now piloted for the first time. From Lavacourt to La Roche-Guyon and from Mousseau to Moisson the steering was perfect. It came back under good control above the group of aids, who drew it down to the ground by the ropes, and it was returned to the shed without any trouble." The balance and steadiness of the airship are said to be excellent and it is much superior to the "Lebaudy" in this respect, owing to the free use of the flat frames. In the afternoon it made a second trip which lasted until nightfall. At 2 o'clock it started off with Lieut. Bois at the helm, and made a number of runs to show the high speed of which it is capable, making also several evolutions at some 300 or 350 feet from the ground. Owing to the use of the planes, it was found that during all the trip only 22 pounds of ballast was used. This is remarkable, inasmuch as the airship stayed in the air nearly until sunset.

The 70-horse-power Panhard-Levassor motor was worked at about two-thirds of its power, running at 650 revolutions per minute instead of the standard speed of 1,000 revolutions. Sometimes exceeding the speed of 30 miles an hour, the huge airship made an average speed of 22 miles, which is a high figure.

The "Patrie" made its fourth flight on the 24th of November and this was as successful as the former trips. Starting from the balloon shed at Moisson at 9 o'clock in the morning, it sailed above the village and the surrounding forest, amid a heavy fog, but this did not prevent the aeronauts from continuing the evolutions. Everything went well with the Panhard motor in good order and the airship kept a fine balance in the air. After a flight of one hour the "Patrie" was brought back to the starting point. On board were Capt. Voyer, Lieut. Bois, the mechanic Scheffer of the Panhard firm, and the mechanics Rey and Deguffroy. During the trip it faced a wind of 20 miles an hour, although the motor was not run at a higher speed than 650 revolutions per minute. The airship carried 750 pounds of ballast, of which only 198 pounds were used.

On Nov. 26, the sixth and most remarkable trip of all was made, as the airship sailed 2 hours and 12 minutes, and covered a distance of 57¾ miles.

The start took place at 9:25 A. M., with Capt. Voyer at the helm and others in the car. With the 70-horse-power motor in fine shape and all working well, the airship made evolutions about the region of the Seine near Mantes and Vernon and could be steered with great ease. Several times it disappeared from view in the fog. It came back to the balloon shed at 11:37. Capt. Voyer showed remarkable skill in handling the airship on this occasion. As a result of this performance, the War Department's commission which had been detailed to watch the results of the trials, consisting of prominent officers of the army, decided that it had showed what it could do in the most satisfactory and conclusive manner, so that the airship was formally accepted by the War Department and will be made the second unit of the proposed fleet, together with the "Lebaudy," which is now used for training the special aeronautic corps at the army balloon grounds of Chalais-Meudon, near Paris. On the next trip, made on the 28th, seeing that the airship now belonged to the army, the crew was made up exclusively of members of the Aerostatic Corps. Starting at 10:18 A. M., the airship was again piloted by Capt. Voyer, and he was aided by Lieut. Bois. The remainder of the crew consisted of Commandant Aron, of the Military Aerostatic Corps, Capt. Dorant, and two mechanics. Lasting for one hour and five minutes the trip finished at 11:23 A. M. at the shed, with fine weather prevailing, and a rather strong southwest wind. The airship made a good speed toward Freneuse and Bonnières, then returned, passing above the grounds and dropping a mock projectile with news of the trip, then continued sailing over Mericourt and Rolleboise, along the Seine.

On this, which was the sixth ascension, the airship covered about 93 kilometers (57¾ miles) in two hours and returned without accident to its shed. The average speed was therefore about 26¼ miles per hour. Inasmuch

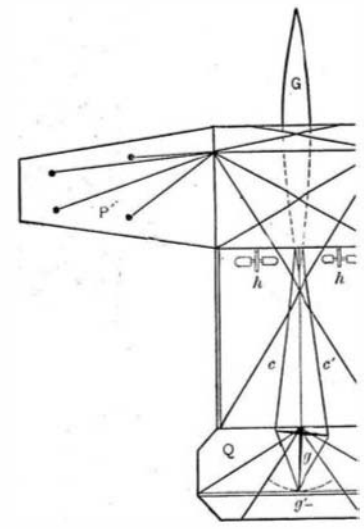

Diagram of Count De la Va

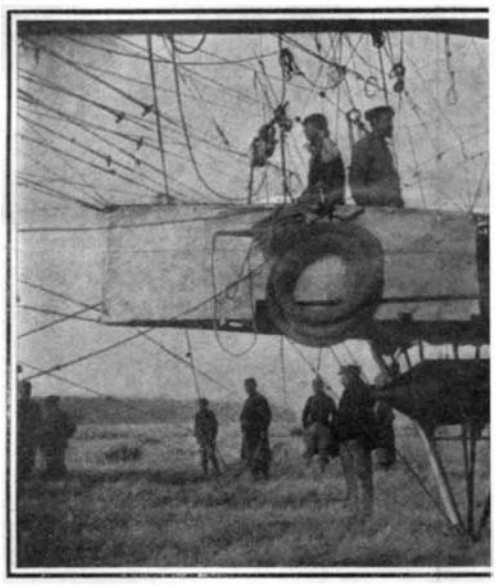

The Car of the "Patrie," Ready to Start

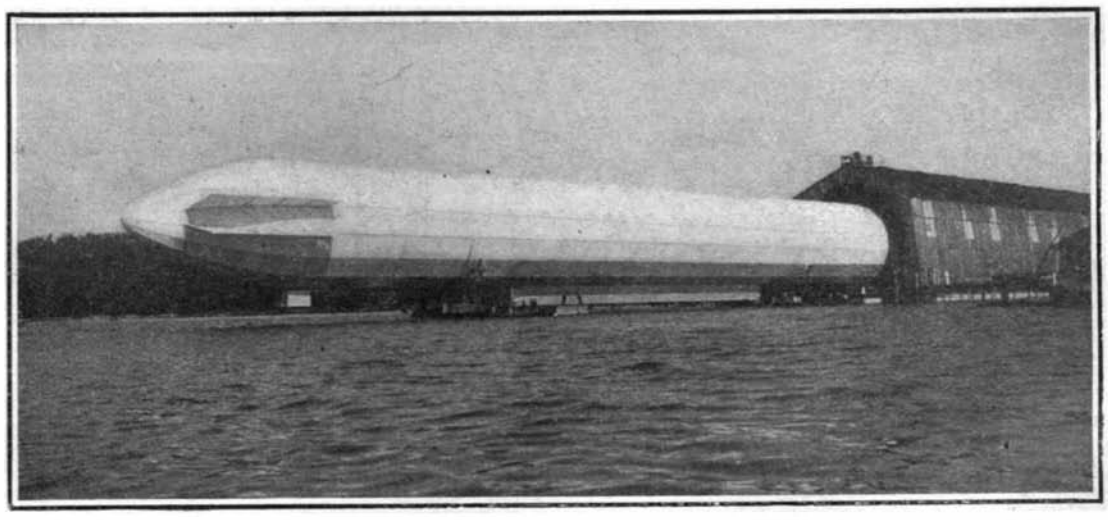

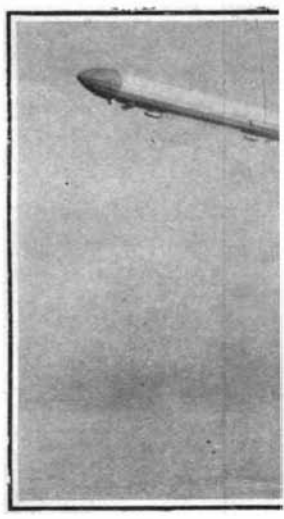

This Airship, which is 38 feet in diameter by 410 feet in length and which has a capacity of 367,120 cubic feet, held itself stationary against a 33½-mile-an-hour wind on Jan radius of 3,000 miles at 31 miles an hour. The latest French Airship, "La Patrie," is 33¾ feet in diameter by 196 feet long and has a capacity of 111,195 cubic fe

Count Von Zeppelin's Airship—The Largest and Fastest Thus Far Constructed—Coming

SOME OF THE MOST RECENTLY-CONSTRUCTED AEROPLANES AND AIRSHI

the as time is lost in getting up speed and in slowing down at the end of its journey, the average running speed was doubtless somewhat higher.

The fleet of airships which the French army is to have will be three in number, for the present at least. It will be remembered that after the remarkable success of the "Lebaudy," in which figures the trip from Moisson to Paris, it was turned over to the government, who thereupon decided to have built the present airship "Patrie." Later the Minister arranged to have a third airship built in 1907 on the same general plan, and it will be known as the "République." Engineer Julliot's designs are used in all cases. The "Lebaudy" is now in service in the military aerostatic park of Meudon, in the suburbs of Paris, where a special army corps is being trained so as to handle the airships in the future. As to the "Patrie," it is to be used at the military quarters of Verdun, near the frontier.

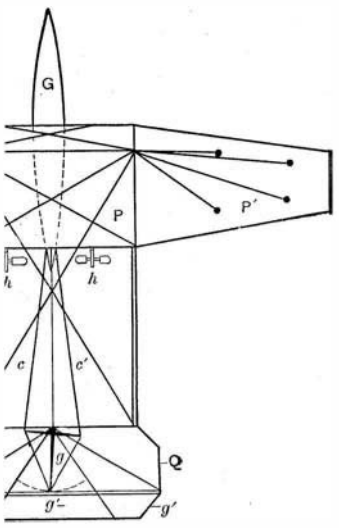

De la Vaulx's Aeroplane.

We have already given some of the leading details about the new airship which M. Henri Deutsch has had constructed after the designs of Aeronaut Surcouf. It was taken out and put through its first evolutions in the air a few weeks ago, and while on the whole it will no doubt be a success, an accident to the carbureter prevented it from showing what it could do, and moreover when it came to earth the car received a shock, through the negligence of the workmen, which caused it to break in two by its own weight, so that the new airship has been somewhat unfortunate in its first experiments, through no fault in the design. It is to be hoped that it will be in running order before long, but considerable work will have to be done in repairing the nacelle.

to Start on the Flight of Nov. 23, 1906.

It made its first trip on the 11th of November, commencing to operate with the guide rope at 10 o'clock. The crew was made up of four persons in the car, the constructor, Ed. Surcouf, at the helm, Henry Kapferer, engineer Cormon, and the mechanic Paulhan. Rising then above the Seine, the propeller started and the airship went through a series of evolutions which showed that it could be controlled with ease. But soon afterward the motor had to be stopped owing to the freezing of the carbureter. This rather unusual accident was caused by the fact that the exhaust was cooled by means of a water jacket which was designed to diminish the fire risks and prevent sparks from flying. But this was a disadvantage for the carbureter, as the exhaust could no longer be made to heat it to the proper point. The strong draft caused by the airship's movement gave a still further cooling effect when going at any great speed, so that the aeronauts were obliged to stop every three minutes or so on the flight. Under these conditions, M. Surcouf decided not to continue that day, but to alight near the Seine on the plain of Chambourcy. While in the air, however, it was observed that the airship was remarkably steady. When alighting, the men on the ground made a false maneuver for which there seems to be no excuse, and, as has been stated, the car was allowed to break by its own weight, so that some weeks will be needed for repairs. It appears that the water circulation and carbureter can be arranged to work in a simpler way. The system of cylindrical gas bags is thought to be preferable to a set of canvas frames for steadying the craft, and in fact when in the air the airship was very stable.

The Bleriot aeroplane was recently tried in Paris, mounted by M. Lemétayer. Its form remains about the same as described heretofore, except that in place of one of the two elliptical frames a regular aeroplane structure consisting of two horizontal superposed surfaces is employed. The aeroplane rolled out on the ground at full speed upon its wheels, but was prevented from rising in the air, for when it ran over a ditch the carriage broke.

Following the movement which has taken place lately in Paris in favor of aeroplanes, Count De La Vaulx is to build a flyer upon a new design. In order to make experiments with aeroplanes, he is designing one which will be built under the direction of aeronautic engineer Tatin, and Maurice Mallet, the well-known constructor of Paris, at the latter's establishment in the suburbs. It will, no doubt, be finished within a few months. Some details have been made known as to the general features of the new aeroplane. It will not be built according to the box plan such as Santos Dumont accepted, but on the contrary is designed on the lines of a body with outstretched wings resembling a soaring bird. As will be noticed in the diagram, there are two propellers turning in opposite directions. The propellers are worked by a 50-horsepower gasoline motor of the Antoinette type, built by Levavasseur, which is meeting with much favor on account of its extra light weight. The motor is placed together with the pilot in the car *C*, which forms the main body of the apparatus and is composed of a frame of light wood strips covered with canvas. It will have a rectangular section ending in curved points at each end. Above the car are fixed the main wings *P' P'*, forming plane surfaces with the body *P*. Back of these is mounted a fixed tail *Q* having a rather large flat surface, hinged to which in the rear is a frame *g'* which serves as a horizontal rudder. Below the tail *Q* is placed a vertical rudder *g* which is mounted on a pivot and can be worked from the nacelle by cords *c c'* with the end moving as shown by the dotted line. In the present design it is desired to reduce to a minimum the opposing resistances and to obtain the highest speed possible for the aeroplane, which will allow of cutting down the area of the flying surface and the size of the apparatus. It is expected to secure a speed of 45 miles an hour with the 50-horsepower motor.

Santos Dumont is engaged in designing a new aeroplane upon somewhat different lines from the present one, and expects to have it finished so as to begin trying it early next year. He considers the aeroplane which he used up to now as simply an experimental apparatus in order to obtain some data for a more complete one, and the flyer which he will build according to his experience will be quite different in many respects, as he found that the design had to be modified considerably in order to secure the best results. He says that the wings of the present aeroplane were built much larger than was needed to secure a good effect in the preliminary work. The new flyer will be equipped with a 100-horse-power motor which is now building at the shops of the Levavasseur firm near Paris, and will have sixteen cylinders mounted as before in V-shape, being probably the lightest existing motor for that power. It will enable him to reach a much higher speed than before, and he expects to reach 75 miles an hour. He is engaged in building a small model of the new aeroplane and will no doubt have it finished within a week or so. In the meantime, he is overhauling his motor, and expects to go on with the trials of his present machine before long, seeing that the weather is somewhat favorable at times.

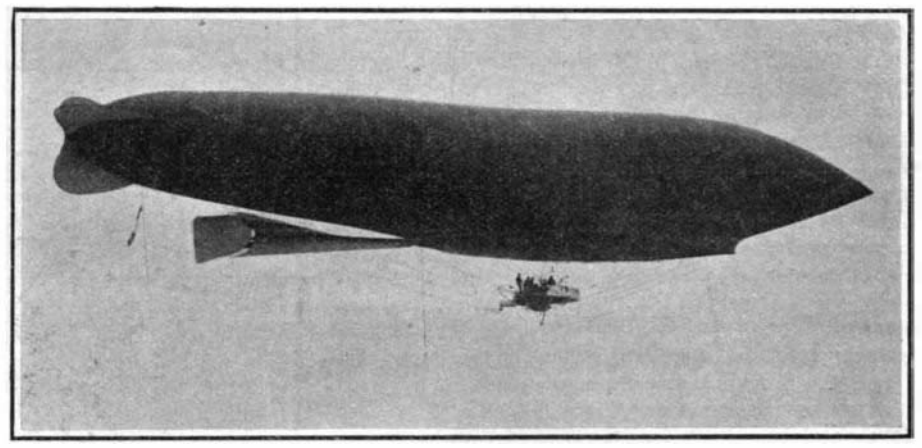

The French Military Dirigible, "Patrie," in Flight.

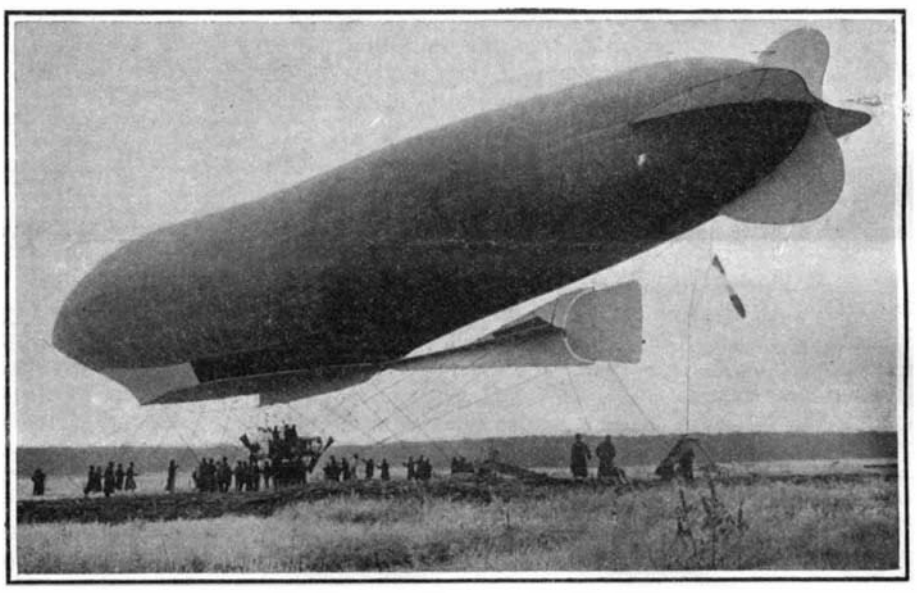

The New French Dirigible "Patrie."

A new aeroplane which is to enter the field in France is to be built by the Antoinette Company, which has been formed for constructing the Levavasseur light-weight motor, used by Santos Dumont and others. The designs of the new flyer are to be drawn up conjointly by Capt. Ferber and M. Levavasseur. As Capt. Ferber is one of the pioneers in aeroplane work in France and has already built and made experiments with a flyer, and given the experience which M. Lavavasseur has had in motor work for the last five years, there is no doubt that the new aeroplane will be one of the foremost in the field. It is to be known as "Antoinette No. 1," and will be piloted by Capt. Ferber, also taking one other person, so that no doubt it will be of a large size and high power.

In the history of navigation of the airship the efforts which have been spent by the famous German officer, Gen. Count Von Zeppelin, form one of the most interesting chapters. Count Von Zeppelin, has devoted a considerable portion of his life and expended one fortune in attempting to solve this problem. The latest cable advices indicate that he has at last succeeded and that the airship which he has designed and constructed can be classed among those which are practical.

The readers of the SCIENTIFIC AMERICAN are aware that his experiments have extended through several years. The first airship he built which attracted the attention of scientists and others was the one tested on Lake Constance in 1900. Although but three flights in all were made at that time, the performance of the airship was such as to encourage the belief that with certain alterations it would be successful. But for a series of unfortunate accidents, all of the tests would probably have resulted successfully. As it was, the craft was propelled against a breeze calcu-

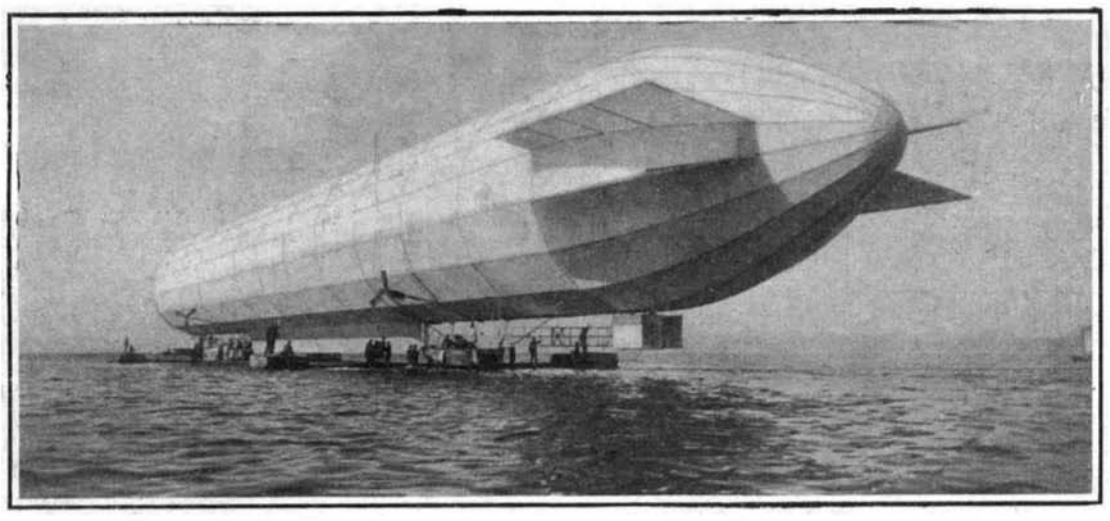

wind on January 17 last, by means of two 35 H. P. Gasoline motors driving four propellers. The Airship can lift three tons additional to its own weight, which gives it a 1,195 cubic feet. Driven by a 70 H. P. motor and two propellers, this dirigible has recently made about 30 miles an hour. Its lifting capacity is 2,777 pounds.

—Coming Out of Its Shed and Performing Various Evolutions Above Lake Constance.

'D AIRSHIPS THAT ARE NOW BEING EXPERIMENTED WITH IN EUROPE

lated by the experts to be blowing at the rate of 12 miles an hour, yet it maintained a speed of nearly 18 miles an hour. During one flight it remained in the air an hour and twenty minutes, although the steering gear was caught in the skeleton framework and became partly unmanageable. The attempts proved also that the airship was dirigible in spite of its great size, as several complete circles were made while in the air. The expense of designing and building a craft of such proportions and the outlay for the balloon house and necessary machinery exhausted Count Von Zeppelin's resources and further development of his design was given up until November, 1905, when again accidents occurred which prevented the trial from being a practical success. The demonstrations showed, however, that the air ship could carry five men and sustain them aloft in addition to the double equipment of motors. The accident in 1905 was again caused by trouble with the steering apparatus located on the forward portion of the craft, partly submerging it in the water of the lake, although the after part of the car was sustained in the air by the gas and one motor.

During the trials which were held in the latter part of 1906 the airship at one time was aloft for a period of over two hours and reached a height of 1,000 feet above the lake. It was under perfect control during the entire period, being steered readily in various directions, describing circles, and performing other maneuvers. These demonstrations were witnessed by a number of experts in aerial navigation.

The immense proportions of the Zeppelin design form its most notable feature. The craft utilized in 1900 was about 420 feet in length. The one which made the last ascent is but ten feet shorter, while its diameter has been somewhat increased, giving it a capacity of about 370,000 cubic feet of gas. This is 32,000 feet more than the former type. The total weight of the present air ship, however, is 2,200 pounds less than the original design, being 19,800 pounds with ballast and equipment. The theory of the designer in favor of liquid ballast is still adhered to, the water being held in bags which can be opened by means of valves operated by wires leading from the controlling station. The gas bag is divided into six compartments supplied with suitable valves under the control of the engineer.

The engines form an excellent illustration of the wonderful progress which has been made in motor invention. The experiments in 1900 were made with an engine of but 30 horse-power. At the present time the two motors employed represent a maximum horse-power of 170 more than five times the capacity of the original motor—yet their total weight of 880 pounds is but 11 pounds more than the 1900 type. One engine is placed forward and the other aft beneath the bag in order to distribute the weight as equally as possible. The steering-apparatus is also in duplicate, but so arranged that one man can control both the forward and rear rudders. A high grade of gasoline is used as fuel, and the reservoirs attached to the air ship contain a sufficient supply to permit it to remain aloft a period of several hours.

It has been questioned why Lake Constance was selected by Count Von Zeppelin for the scene of what will be his life work. It is understood that he preferred this locality partly because of its suitability for the maneuvering of an air ship of such proportions, and also because of the favorable wind currents. As shown by the accompanying photographs the building for housing the airship is so arranged that when the craft is to be used, it can be drawn out by one of the small steam boats in service upon the lake. It usually rests upon floats built to support it until the engines are started and it gets under way. Despite the enormous size of the gas bag, the arrangements for filling it are such that it can be completely inflated in about six hours.

A NEW HAND-PROPELLED AUTOMOBILE FOR CHILDREN.

The accompanying illustration shows a new kind of toy automobile recently invented and placed on the market. The machine is known as the Exer-ketch, and it differs from most toy autos in that it is hand-driven by levers instead of being propelled by the feet. It consists of a U-shaped iron frame carrying at its rear end a large spur gear that meshes with a pinion of about half its size mounted upon the rear axle. The shaft of the gear carries a crank on one end and a sector having three holes on the other. The crank and sector are attached by connecting rods to the two levers pivoted near the front end of the frame. By placing the connecting rod in different holes in the sector, the levers can be made to work together or in opposition. The levers can be pivoted at three different points in the frame in order to adjust them to the length of reach of the operator, who sits as shown and steers with his feet by turning the pivoted front axle. A special form of clutch locks one of the rear wheels to the revolving rear axle for the purpose of driving the machine. The seat is of sufficient length to accommodate two children readily. Besides being a good chest and arm developer, this new form of auto will doubtless be found a favorite by all children on account of its method of propulsion being similar to that of a hand car and because of the comparatively fast speed they can attain with it.

A NEW TYPE OF TOY AUTOMOBILE.

A NEW FORM OF RAILWAY ROLLING STOCK CONSTRUCTION.

We had occasion recently to call attention to the evils of the present practice of rigidly attaching opposite car wheels to a common axle. When rounding curves the outer wheel should travel faster than the inner one; but this it cannot do owing to the rigid connection of the two wheels. Consequently, one or both of the wheels must slip, grinding and wearing away the tread surfaces of the wheel and rail. Aside from the fact that the load is thus increased at curves there is constantly the danger of breaking a flange or of a wheel climbing the rail and thus derailing the car. To overcome these evils, Mr. Emilio Mujica Canto, of 116 Broad Street, New York, N. Y., has invented the construction illustrated in the accompanying engraving. It will be observed that each wheel of the truck is formed with a separate short axle mounted independently in its own bearings. Thus each wheel can adapt itself to its own peculiar requirements irrespective of the movements of its fellow. The new construction is best shown in the section view of one of the wheels, and it will be evident that it is as strong as the usual construction. A journal box is provided at each end of the axle to supply oil to the two bearings. If desired, the inner box may be sealed as shown in the section view, and it may be filled by feeding the oil from the outer box through a central bore in the axle. Aside from overcoming the defects mentioned above, it is claimed for the new truck that the life of the wheels is materially increased, it will round curves of smaller radius, it is more flexible on uneven roadbeds, and allows of a more uniform distribution of the weight of the car. By using two journal boxes with a connecting oil passage the danger of a hot box is materially reduced, for, if the oil of one box is exhausted, it will renew its supply through this passage from the other journal box.

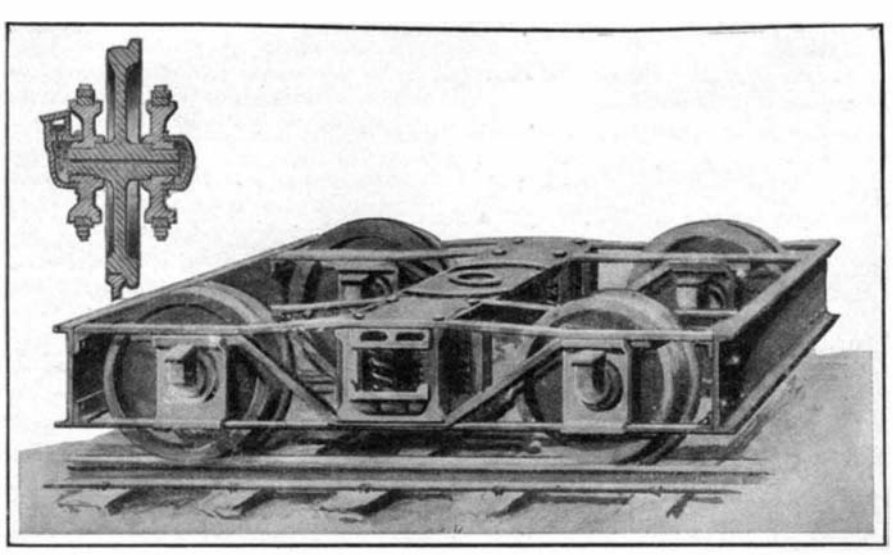

A NEW FORM OF RAILWAY ROLLING STOCK CONSTRUCTION.

An Elastic Roadbed.

Consul-General Richard Guenther quotes the correspondence in a Frankfort paper from Zurich, Switzerland, stating that trials were recently made there with an elastic road covering invented by Street Superintendent Aeberli.

A section of Hohlstreet was covered with Aeberli material. Many persons witnessed the trial, among them representatives of the municipal and cantonal authorities, who showed great interest. Two steam rollers were employed to smooth the road covered with the new macadam. Trials with a six-horse wagon loaded with ten long tons gave a satisfactory result after the macadam had been sufficiently rolled. The macadam is prepared of gravel of a fineness of from 30 to 50 millimeters (1.181 to 1.968 of an inch) in diameter, and is freed of all earthy matter. This gravel is first heated in a specially constructed machine, and from a revolving drum is subjected to the action of liquid tar, so that each particle of gravel becomes covered with a coating of tar.

This tarred gravel is then put up in heaps, covered, and allowed to remain so from eight to ten weeks. It is asserted that during that period fermentation occurs which causes the tar to penetrate into the pores of the gravel and in this way lessens the formation of dust. In covering the road with this material the most painstaking cleanliness must be observed and dry weather must be awaited. No foreign matter must become mixed with the macadam. In rolling it no water must be used. The cost of preparing this macadam is small, 44 pounds of tar being sufficient for 1 cubic meter (35.3 cu. ft.) of dry gravel; or if limestone is used, 55 pounds. The machine is operated by four laborers and furnishes from 10 to 15 cubic meters (353 to 530 cubic feet) per day.

LUBRICATOR FOR STEAM ENGINE CYLINDERS.

Lubricators of steam engines intended for use in the open, such as traction engines, and the like, are liable to become clogged in cold weather. To obviate this difficulty a recent invention provides a steam jacketed oil chamber which prevents the oil from freezing; furthermore, the oil is forced from the oil chamber into the cylinder by means of live steam. The flow of oil is regulated by a needle valve through a sight feed which is constantly under the eye of the engineer. The apparatus is clearly illustrated in the accompanying engraving. From the main steam pipe a pipe *A* leads through the jacket *B* into the oil chamber *H*. A branch *C* from this pipe opens into the jacket *B*. From the oil chamber *H* a pipe leads to the regulating valve *D* which is formed with a glass tube section through which the engineer may watch the flow. Thence a tube *E* leads to the steam chest. The tube *E* is connected by pipe *F* with the jacket *B* and a bypass connects the pipe *F* with the exhaust pipe of the engine. In use if the oil is frozen, the valves of pipes *C* and *F* are open to permit a flow of steam through the jacket, thus melting the oil in the oil chamber. The steam discharges into the steam chest, unless the bypass is open, when it flows directly into the discharge pipe. The oil in the chamber *H* is forced, drop by drop, through the valve *D* by steam from the pipe *A*, and is injected with the steam through the pipe *E* into the steam chest. The inventors of this improved lubricator are Messrs. Charles L. Grayber, and Edward R. Kerrigan, of Deer Lodge, Mont.

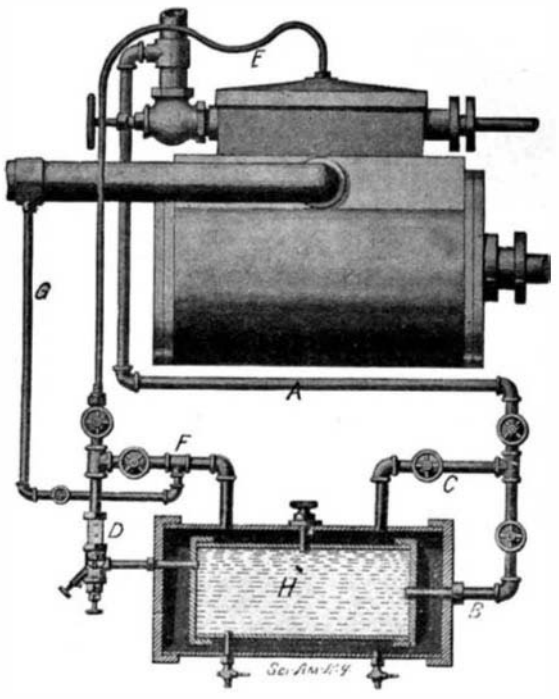

LUBRICATOR FOR STEAM ENGINE CYLINDERS.

SCIENTIFIC AMERICAN

[Entered at the Post Office of New York, N. Y., as Second Class Matter. Copyright, 1906, by Munn & Co.]

Vol. XCV.—No. 25.
ESTABLISHED 1845.

NEW YORK, DECEMBER 22, 1906.

10 CENTS A COPY
$3.00 A YEAR.

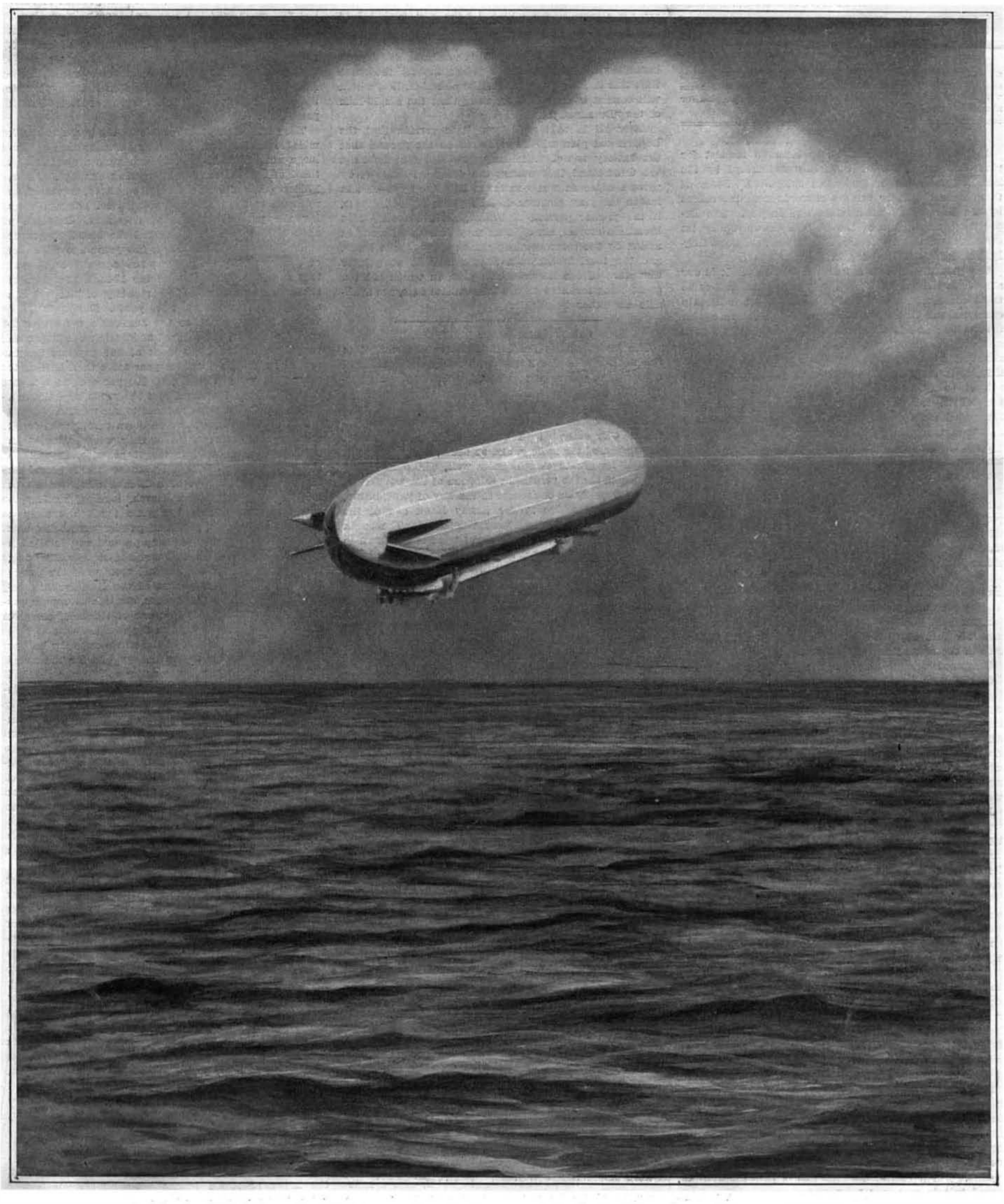

THE GREAT DIRIGIBLE AIRSHIP OF COUNT VON ZEPPELIN FLYING OVER LAKE CONSTANCE, SWITZERLAND.—[See page 470.]