AN AUTOMATIC STEERING HEAD FOR BICYCLES.

A patent has been granted to Antonio C. Garcia, of Modesto, Cal., for a novel steering head, by means of which the front fork and wheel are automatically returned to their proper positions by the weight of the rider. Of the accompanying illustrations, representing parts of the improvement, Fig. 1 is a bicycle steering head with portions broken away to show the improvements attached; Fig. 2 is a vertical section through a

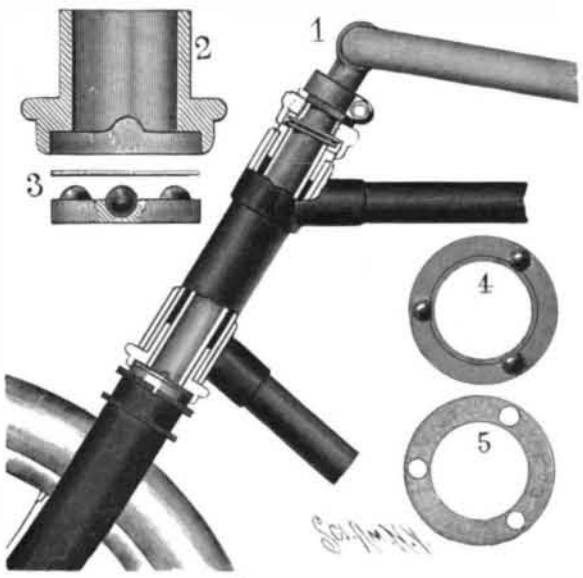

GARCIA'S AUTOMATIC STEERING HEAD FOR BICYCLES.

bearing cup at the lower end of the steering head; Fig. 3 represents a ball-ring and felt washer separated, but showing their position relative to the bearing cup; Figs. 4 and 5 are plan views of the ball-ring and felt washer respectively.

Referring to Fig. 1, it is seen that the fork and the head are substantially the same in appearance as in ordinary bicycles. But on the upper surface of the fork-crown, the ring, shown in Figs. 3 and 4, is properly secured and prevented from turning by means of a pin. In a series of hemispherical recesses in this ring balls are placed. The cup, represented in Fig. 2, consists of a sleeve inserted within the tube, properly secured, and is provided with a flange extending downwardly from the base and embracing the ball ring, as shown in Fig. 1. The bottom of the cup has radially extending grooves with sloping sides adapted to receive the balls. The felt washer illustrated in Fig. 5 lies between the ring and cup, as indicated in Fig. 3. is provided with holes to receive the balls, and is saturated with oil to lubricate the parts.

When the fork is turned the ball ring, revolving beneath the cup, will cause the head to be slightly raised, due to the balls traveling up the inclined surfaces at the sides of the grooves. The rise in the head is small, never exceeding half the diameter of the balls. When the handles are released the head will be brought back to its normal position by the balls rolling down the inclines at the sides of the grooves. The wheel is thus automatically brought back to a straight position by the weight of the rider acting upon these inclined surfaces.

Within the upper end of the steering head another cup is secured, also having downwardly projecting flanges. A spiral spring within the upper cup holds the lower cup down upon the balls, but upon compression permits the head and lower cup to rise.

A NOVEL PNEUMATIC TIRE.

The tire which we illustrate is in general characterized by a rim having a number of pneumatic bulbs

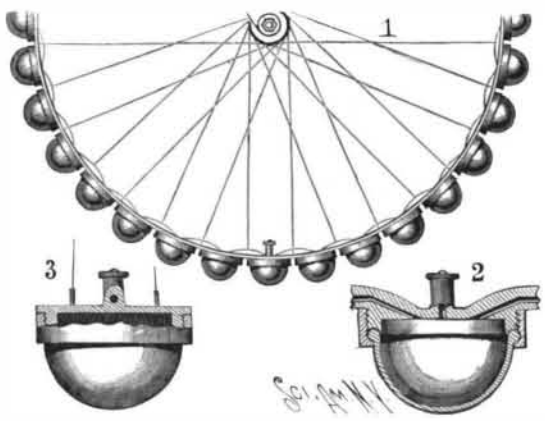

FONTEINE'S PNEUMATIC TIRE.

projecting outwardly, and serving as the tread of the tire, the bulbs being in communication with one another, so that they may be simultaneously inflated or deflated.

Fig. 1 is a side elevation of a portion of a wheel, with the device attached. Fig. 2 is a fragmentary longitudinal section of the tire. Fig. 3 is an irregular transverse section, with part of the bulb in perspective.

The tire is provided with a metallic rim in which the bulbs are secured. The rim has a series of annular ribs on its outer surface, and on each rib there screws a clamping band. The bulbs are provided with beads at the edges of their bases, as shown in Fig. 2, which beads are held between the ribs and clamping bands. The rim on its inner surface, it will be observed, is provided with equidistant arc-shaped enlargements connecting adjacent bulbs. As indicated in the sectional views, these enlargements are provided with passages which establish communication between the bulbs. A single nipple in one of the bulbs can therefore be used to inflate all the bulbs simultaneously.

The bulbs being independently movable, any one of them can, when punctured, be fitted with an interior skin or film of fabric. The repaired bulb can then be replaced and the tire inflated. The pressure of the air will force the interior skin against the inner walls of the bulb, thus closing the puncture. The tire is the invention of Herman A. Fonteine, of Auburn, N. Y.

Petroleum in Maccabees.

An interesting confirmation of the accuracy in practical matters of what are called the apocryphal Scriptures may be found in a consideration of the modern uses of petroleum, says The New York Sun. One of the very earliest mentions of this natural product is in the second chapter of II. Maccabees, although Herodotus is said to have referred to this "rock oil" about 200 years earlier. The fact that no commercial use of the oil was made does not prove that the existence of it was unknown, for the existence of petroleum was known in the United States for many years previous to 1859, when it first became commercially important. If an enterprising people like the Americans allowed the oil to lie untested for half a century or more, it is no matter of wonder that the people of Persia ignored its presence.

At all events, the account in Apocrypha has such a stamp of truth about it that the contempt of the distinguished commentator Bishop Wace seems hardly warranted. The history of the Maccabees is contained in five books, of which the Protestant churches call the first two only apocryphal. In book 2, chapter i., verse 19, we read:

"For when our fathers were led into Persia, the priests that were then devout took the fire of the altar privily and hid it in an hollow place or a pit without water, where they kept it sure, so that the place was unknown to all men. Now, after many years, when it pleased God, Neemias, being sent from the King of Persia, did send of the posterity of those priests that had hid it to the fire; but when they told us they found no fire, but thick water.

"Then commanded he them to draw it up and to bring it; and when their sacrifices were laid on, Neemias commanded the priests to sprinkle the wood and the things laid thereupon with the water. When this was done and the time came that the sun shone, which afore was hid in a cloud, there was a great fire kindled, so that every man marveled.

"And the priest made a prayer while the sacrifice was consuming. . . . Now, when the sacrifice was consumed, Neemias commanded the water that was left to be poured on the great stones. When this was done there was kindled a flame, but it was consumed by the light that shined from the altar. So when this matter was known, it was told the King of Persia, that in the place where the priests that were led away had hid the fire there appeared water, and that Neemias had purified the sacrifices therewith. Then the king, inclosing the place, made it holy, after he had tried the matter. And Neemias called this thing naphthar, which is as much as to say, a cleansing, but many men called it nephi."

To one acquainted with the natural springs from which petroleum flows in the petroleum regions, it seems at least probable that the "thick water" found where the fire had been hid by the priests was petroleum, or a spring of water that brought up petroleum to form a thick scum over the pool. For when the naturally produced petroleum of the present day is thrown over wood it will, as every petroleum producer knows, serve to make the wood burn more fiercely. And then, as to the great fire that was kindled when the sun came out from behind the cloud, it is to be remembered that the thermometer rises to more than 140° Fah. in the direct rays of the sun on the plains of Persia, and that the lighter parts of crude petroleum are inflammable at that temperature. Moreover, the priests may have used the sun glass, that was not unknown in those days.

Referring to the use of the word "cleansing" in the quotation above given, the commentator says:

"The MSS. vary between nephthar,' 'nephthai' and 'nephtha.' No word at all near to any of these forms has the meaning of 'a cleansing' in Hebrew. It has been conjectured that the original word used was nithhar, which might perhaps have this meaning; but more probably the etymology of the forger of the letter was at fault, and he gave a fanciful explanation of a word whose true meaning was unknown to him. Naphtha was the name given by the Greeks to a form of mineral oil produced in many parts of Persia, which was highly inflammable; and it is this Greek term which the author of this letter intended to use. Perhaps he misspelt it, or perhaps it was corrupted by the copyists, first into 'naphtha,' and then further into 'nephthar.'"

Of course, with the modern uses of benzine as a cleanser in mind the matter becomes clearer; while, if to the mere cleaning properties of this petroleum product be added the healing properties which the Hebrews always associate with cleansing, and the long known cures effected by petroleum be kept in mind, the accuracy of the Maccabees historian is confirmed beyond question.

A NEW STEAM BOILER AND FURNACE.

The illustration which we present herewith represents an improved steam boiler of the horizontal fire-tube type, having a chamber extending longitudinally below the boiler shell.

The boiler is provided with the usual series of fire-tubes running longitudinally. Two exterior furnace shells are located beneath the boiler, each having a circular water space extending throughout its length. The furnaces are provided with a corrugated cylindrical fire wall of such diameter as to leave a space between the wall and the outer shell, and have the usual grate bars and provisions for securing a good draught. The boiler shell and furnace are at each end connected by thimbles which permit the communication of the water spaces in both boiler and furnaces. Extending between the water space of the furnaces and the interior of the boiler are one or more water circulating pipes exposed to the heat of the furnace. By this means the water passing upward is heated before entering the boiler. The feed water passing from a cold water supply is introduced within the lower portion of the upright circu-

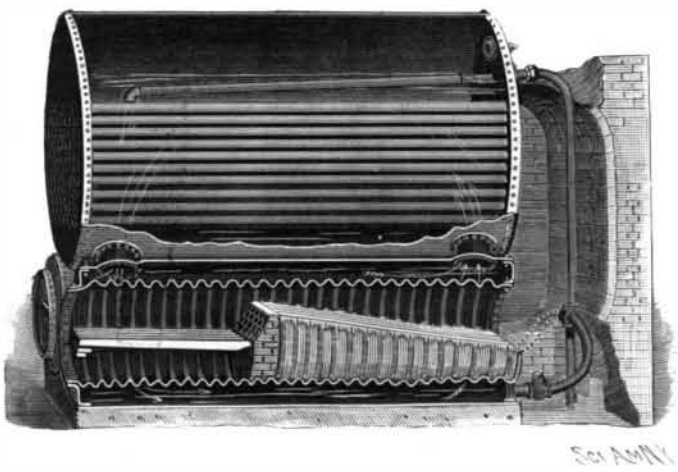

HOPKINS' STEAM BOILER AND FURNACE.

lating pipe, causing the feed water to mingle with the water circulating between the boiler and water space in the furnace and heating it before being introduced in the boiler.

The rapid, continuous and uniform water circulation throughout the interior of the boiler assures its maximum efficiency as a generator of high-pressure steam, and is designed to obviate the strains due to the unequal expansion of the material composing the boiler.

The furnace and boiler are the invention of William Hopkins, of Dubuque, Ia., and are manufactured by the Iowa Iron Works, Dubuque, Ia.

Elevated Trains on the Brooklyn Bridge.

The Brooklyn Elevated Railway Company began running trains over the Brooklyn Bridge on June 18, and the trains have become very popular, as they run directly to Coney Island, the great day resort of New York. A new platform has been built out toward Park Row, on the New York side, which is used to take on passengers, and the passengers make their exit by the old bridge platforms. The cars have been provided with central side doors and cable grips. It is possible for passengers to take a train at City Hall in New York and be at Manhattan Beach in fifty minutes. As soon as the junction can be made with their present structure, the Kings County Elevated road will also run trains over the bridge. The trains for both elevated railways will pass through the yard at the Brooklyn side and then out on to the regular tracks of the elevated roads. The trolley cars upon the bridge are an unqualified success.

Local Anæsthesia Electrically Induced.

While making experiments on the sensations derived from sinusoidal currents, it was recently discovered by Prof. Scripture, of Yale, that anæsthesia of the tissues resulted from currents of high frequency, the condition even persisting for some time after removal of the electrodes. This should excite the attention of medical men, surgeons more especially · and if such local anæsthesia proves to be wholly practicable and safe, such will prove a veritable boon indeed.