A FOLDING TABLE FOR PAPER HANGERS.

The table shown in the illustration folds in a manner somewhat similar to a checker board, the legs folding completely within the covers formed by the top of the table, the under side of which has downwardly projecting strips on each section to constitute a hollow box when folded, with means for retaining in position a ruler and rotary cutting tool. On the upper surface of the table are two longitudinally extending metallic plates, of zinc or other soft metal, constituting suitable surfaces on which to cut the paper. The four legs are separately hinged to fold, two within each section,

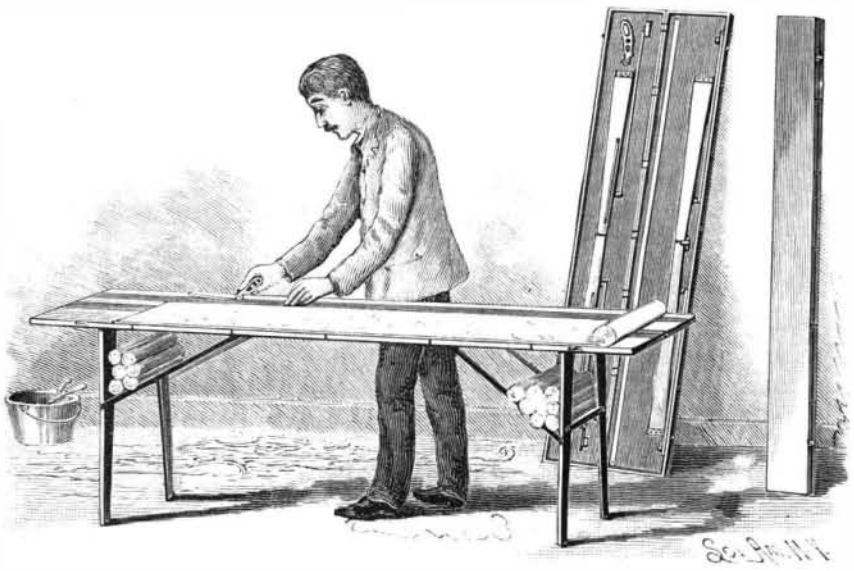

BOYSEN'S FOLDING TABLE FOR PAPER HANGERS.

as shown in one of the views, and when the table is set up, each leg is held in place by a small metallic rod, hinged at one end to the bottom of the table at one side, and engaging an eye on the leg. The legs are further stiffened by a cross rod joining the end legs, such rod being pivoted on one leg and having a hook engaging an eye or pin on the other leg. The cutting implement consists of a handle, in the lower end of which is journaled a rotary cutting wheel, the handle being so formed that the cutter may be readily buttoned upon a stud on the under side of the table when the latter is folded. The cutting wheel is of hard metal, such as tempered steel, and well adapted to cut wet paper. The table is preferably made about six feet long by two feet wide, the figure at the right in the picture showing it folded so as to be conveniently carried under the arm.

For further information relative to this invention address the patentee, Mr. George H. Boysen, No. 4312 Frankford Avenue, Philadelphia, Pa.

SEVERAL USEFUL TOOLS IN ONE.

The illustration represents a compact combination of correlative tools for the use of wood and iron workers, to permit them to be carried as one piece in the

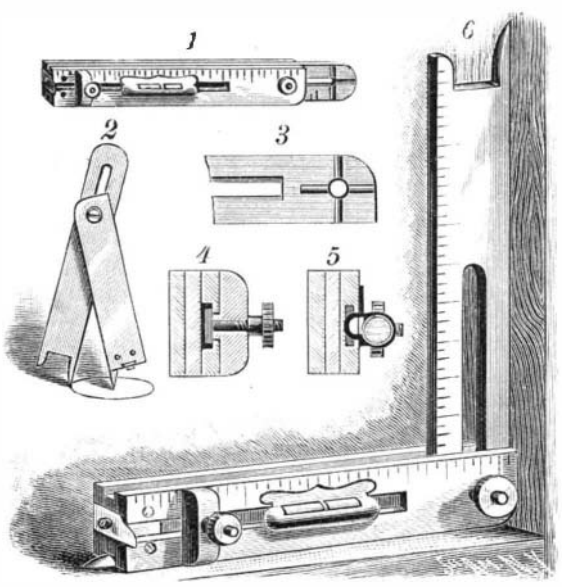

WOODRUFF'S COMBINATION IMPLEMENT.

pocket. It is a combined rule, square, bevel, scribe gauge, spirit level and dividers. Fig. 1 is a side view of the device folded, Fig. 2 shows its principal portions employed as dividers, Fig. 3 is an inner view of a joint section, Figs. 4 and 5 represent transverse sections of the device when folded, and Fig. 6 shows it in the form of a square. The stock has two equal sized strips or side pieces held spaced apart at one end by a slightly tapered block, a slotted blade piece being held intermediate of the main side pieces and a screw bolt and nut being adapted to clamp these pieces, while a longitudinal rib on the inner surface of one side piece of the stock mates a transverse groove in the blade piece near one end, to hold the blade at right angles to the stock when the rib and groove are interlocked. As shown in Fig. 6, the square is available for testing and measuring objects on its inner surface, but by extending the blade in the opposite direction a square will be formed with graduations on its outer edge.

For further information relative to this invention address Mr. R. E. Woodruff, the patentee, No. 192 Hannah Street, W., Hamilton, Ontario, Canada.

The Benefit of Coffee.

Dr. I. N. Love, of St. Louis, in a paper on this subject, said that his experience for five or six years past had been strongly in favor of taking a cup of strong, black coffee, without cream or sugar, between two glasses of hot water, before rising every morning—at least an hour before breakfast. The various secretions were stimulated, the nervous force was aroused, an hour later a hearty meal was enjoyed, and the day's labor was begun favorably, no matter how the duties of the day and night preceding might have drawn upon the system. Another cup at four in the afternoon was sufficient to sustain the energies for many hours. In this way the full effect was secured. If, along with this the proper diet was taken at the proper times—and the ideal diet for those who make large draughts upon their nervous systems and expected to have them honored was hot milk—and at least eight hours of sleep were taken out of every twenty-four, one's capacity for work would be almost unlimited.

AN IMPROVED HEAD-LIGHT FOR LOCOMOTIVES.

The illustration represents a locomotive head-light in which the lamp may be filled and regulated from the outside, or an incandescent light may be used instead of an oil lamp, while the construction provides for the display of various signals without the use of separate lamps, a receptacle being also provided in which day signals may be kept in position for ready use. A slide adapted to support the reflector is mounted on a suitable bracket upon the bottom of the lantern casing proper, as shown in the small view. The reflector is made of two separate sections, divided vertically and transversely at the point where the lamp chimney passes up, the front section having side flanges with movable slides connected to that section by springs, while the rear end of one of the slides is connected by a hinge to the rear section of the reflector. The other slide has a handle for its convenient manipulation, the construction being such that the rear section may be swung aside when desired, or drawn rearwardly against the tension of the springs to admit the lamp chimney between the front and rear sections of the reflector, as shown. The oil reservoir has a downwardly sloping upper side, to facilitate the adjustment of the lamp under the rear end of the reflector, and a filling tube, whose outer end is upwardly curved and provided with a cap, extends from the reservoir through the casing. The burner has a wick raiser or regulator, a shaft from which extends through the rear wall of the casing, where it terminates in a hand wheel, the construction being such as to prevent the wick from being jarred down into the wick tube by the jolting of the locomotive. One side of the casing has a sliding door at its rear end, with a glass-covered opening through which the interior may be inspected, while one of the sides of the rear section of the reflector has a similar opening, whereby the flame of the lamp may be observed while it is being adjusted. When an electric incandescent light is to be used, its bulb has a bail to which is attached a wire passing through a staple on the inner side of the casing, the bulb being projected into a reflecting funnel adapted to fit in the front section of the reflector, the rear section of which is then swung to one side. In the front of the casing, at each side, are screw-threaded flanges or collars, at the outer ends of which variously colored glasses are suitably mounted, to give such signals as may be required, suitable caps or covers being provided for readily covering or exposing the light as desired. A supplemental bottom forms a space below the lantern casing proper, and the side walls of this space have longitudinal cleats adapted to support a series of day signals, the several signal plates carried here having at their rear ends laterally extending lugs, which, when the plates are drawn forward, will engage catches at the front end of the casing, by which the day signal will be suspended, as shown in the large view.

The construction is designed to be economical, and to give all the day or night signals which may be required without the use of extra lamps. For further information relative to this invention, address the patentee, Mr. William J. Burke, Box 900, Seattle, Washington.

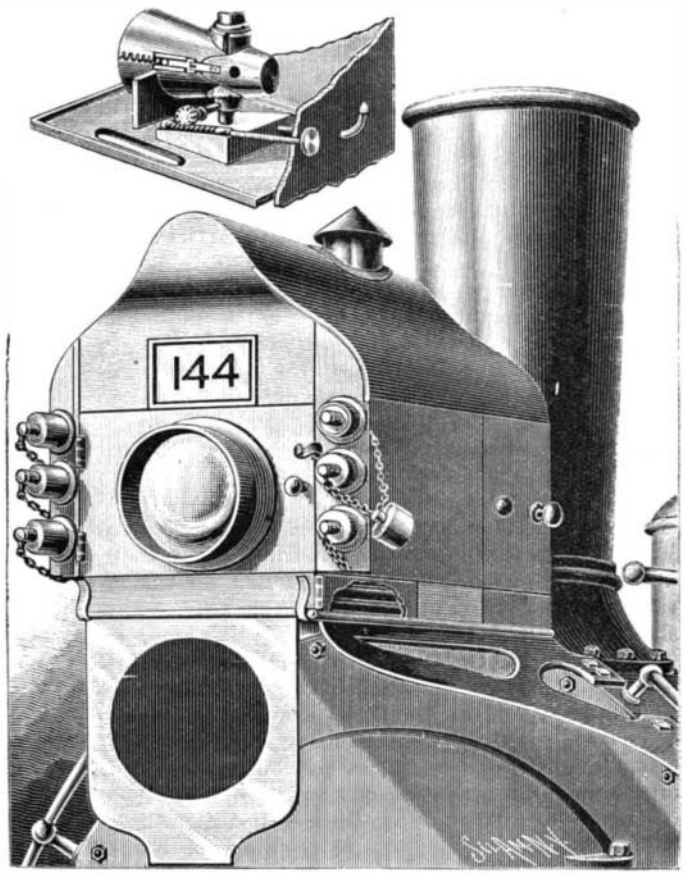

BURKE'S LOCOMOTIVE HEAD-LIGHT.

IMPROVED CROZE.

The improved adjustable croze shown in the annexed engraving is constructed so that it may be instantly adjusted to barrels of different sizes. The large segmental plate which rides upon the rim of the barrel supports the other parts. Below the large segmental plate is supported a smaller plate of similar form, by three rods extending through the upper plate. The lower plate carries two cutters and a plow for forming the croze. The central rod extends through a guide attached to the upper plate, and to the upper and lower plates upon this rod is placed a spiral spring. The guide of the central rod is furnished with ears in which is pivoted a lever which bears upon the end of a short rod arranged parallel with the segmental plate, and provided with a retractile spring for drawing it away from the central rod when the lever is released.

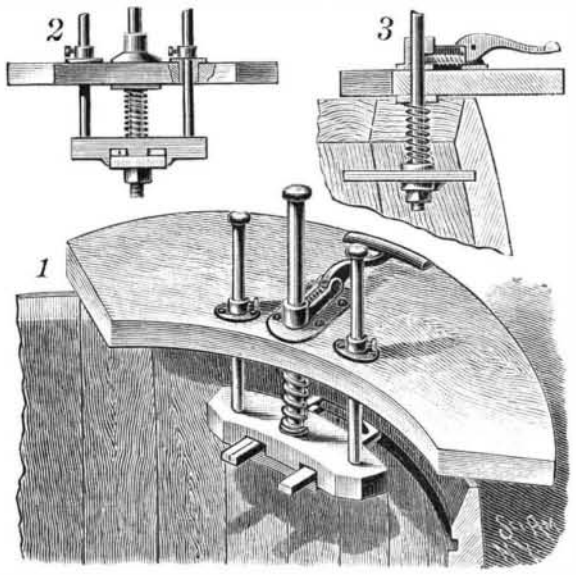

ADJUSTABLE CROZE.

The cutters are placed in any desired position, and the central rod is clamped by pressing the outer end of the lever as the upper segmental plate is grasped to operate the tool. By this means the cutters may be instantly clamped so as to cut a groove for the barrel head at any desired distance from the rim of the barrel. The side rods are furnished with collars having set screws by means of which the downward movement of the lower plate is limited.

The perspective view, Fig. 1, shows the application of the croze to a barrel; Fig. 2 is a sectional view showing the guides for the rods; and Fig. 3 is a sectional view taken at right angles to the plane of Fig. 2.

This invention has been patented by Messrs. William Kampfe and Joseph Nagengast, Bayonne, New Jersey.

© 1890 SCIENTIFIC AMERICAN, INC.