IMPROVED GRINDING MILL.

We give herewith engravings of an improved grinding mill recently patented by Mr. Stephen P. Walling, of South Edmeston, N. Y. The improvement relates to means for adjusting the stones and to the general construction of the mill. Fig. 1 is a central vertical section, and Figs. 2 and 3 are plan views. The mill represented in the engraving is a horizontal mill of the portable class, but the improvements may be applied to vertical and stationary mills.

The husk frame, A, supports the stationary stone and contains the spindle, B, upon which is mounted the running stone. The spindle rests in a step in the lever, D, fulcrumed in the lower part of the frame, A. This lever is connected with the shorter arm of the lever, E, which is weighted sufficiently to overbalance the weight of the spindle and running stone. At the upper end of the spindle there is a hardened steel plug that receives the end of the adjusting screw, F. This screw is prevented from becoming accidentally loosened by a packing of flexible rubber which takes the place of a jam nut. The spindle is held up against the adjusting screw by the counterweight on the lever, E, which keeps the running stone up to its work and at the same time allows it to yield whenever a hard substance chances to get into the mill, and brings it back into its normal position after the hard substance is discharged from between the stones. The adjustable plates, G, fill the spaces in the casing between the pillars and prevent the escape of flour dust. The spindle, B, is made in two parts, which are connected by the coupling, C. This coupling is capable of yielding so that a slight lateral motion in one part of the spindle does not affect the other part. The spindle is provided with means for continuous lubrication, and if by any means it becomes slightly heated the expansion tends to relieve the stones rather than to cause them to bind, as in the ordinary construction. In addition to these advantages the mill can be readily taken apart and the stones conveniently removed for dressing.

Further information mav be obtained by addressing the inventor as above.

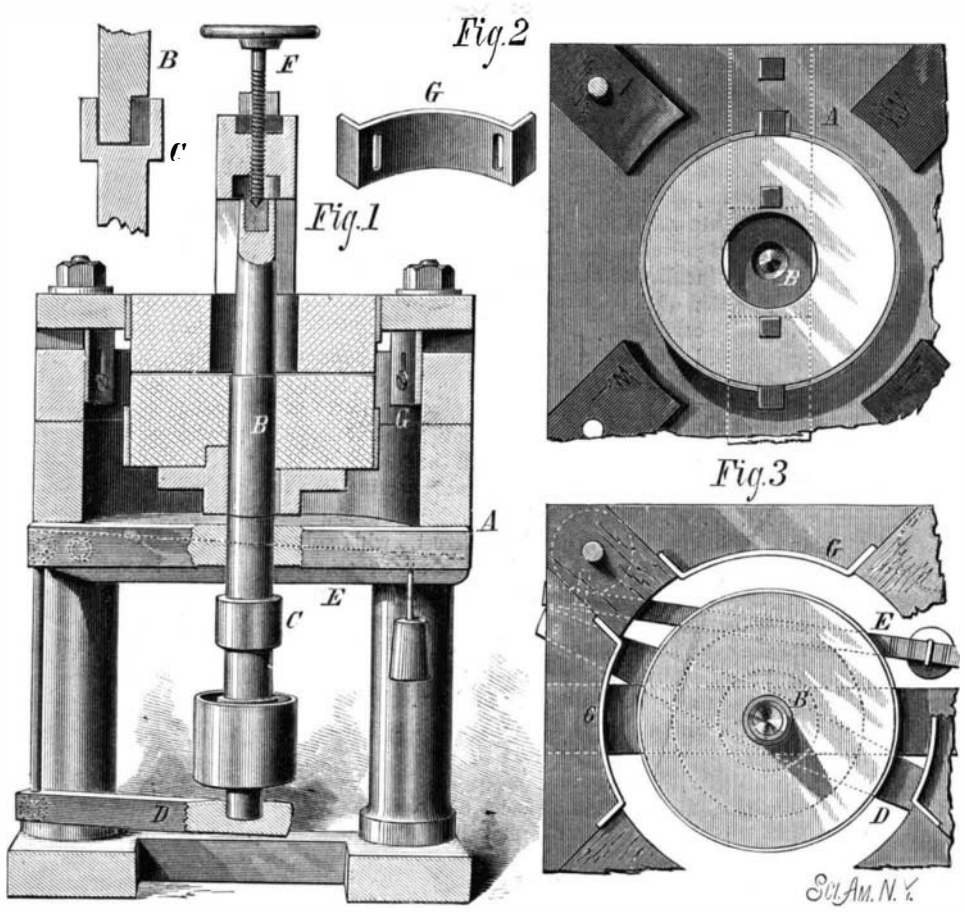

WALLING'S IMPROVED MILL.

A NEW RAILROAD TIE.

The enormous consumption of timber for railroad ties, especially in this country, where we do not take time to use things to the best advantage, is making the right kinds of wood for the purpose more and more scarce every year. The *Lumberman's Gazette* estimates that as we have now about 90,000 miles of railroads the annual consumption of ties or sleepers alone is 40,000,000, or thirty years' growth of 75,000 acres. This tremendous destruction of cross-tie timber, only certain kinds and sizes of which can be used for the purpose, is using up the stock within reach so fast, and good ties are in consequence becoming so hard to get in many quarters, that railway managers are seriously turning their thoughts toward some substitute. Of course the only available rival of wood is iron, and the price of that article from various causes is, and is likely to be for a long time to come, so low that the difference in price between it and wood as a material for the purpose is not the insuperable objection to its use that it was only a few years ago. Indeed many of the European government railways, notably those of Belgium, have decided to lay only iron ties in the future. The German railway management have also advised the same, and it will doubtless soon be adopted. Some of the English railways are also trying them on a large scale. Taking a series of years, iron, from its almost endless durability, is so much cheaper than wood that it must eventually take its place, not only for railroad ties but for many other structural uses now monopolized by wood.

The accompanying engravings illustrate a new wrought iron cross-tie patented in the United States, May 11, 1875, and April 8 and May 20, 1879, by Mr. Henry Reese, of Baltimore, Md., and for which patents are now pending in England, France, Germany, Belgium, Austria, Italy, and Spain. This tie is claimed to meet fully all the requirements of simplicity, cheapness, strength united with elasticity, ease of construction and of laying in track, and to be in all respects a practical solution of the question.

The large illustration is a perspective view of a section of track laid with this tie. Fig. 1 is a plan view of one end of a tie with the rail fastenings and a section of the rail. Fig. 2 is a side elevation of the same, with part of one flange of the tie and of the vertical web broken away to show the shape, situation, and arrangement of the fastening parts. Fig 3 is a cross section of the body of the tie, and Fig. 4 is an elevation of the spring, made of flat steel, as shown in the perspective view; the dotted lines in the same figure show the same spring as made of round steel.

A, Figs. 1 and 2, show the permanent lug, which is turned up from the upper plate of the tie, and against and under which one base flange of the rail is firmly held, while the other flange is held in the same way by the movable clamp, B, which is pressed firmly against (embracing both) the flange and the top plate of the tie by the spring, C. The part of the clamp, B, which goes under the tie has at its end an upturned toe which rises into the opening left by turning up the lug, A. The object of this toe is to prevent the removal of the clamp from its place in case of the malicious or accidental removal of the spring, C, as the clamp is pressed up to the tie by the ballast and can only be taken out by its removal. The spring, C, rests at its free end under a shoulder of the clamp, B, and its fast end is socketed in a slot in the top plate, and has a hook or projection, shown at *a*, Fig. 4, to go under the top plate and keep the spring in position. The object of reversing the alternate ties end for end, as shown, is to bring the permanent lugs, and also the movable clamps, on both sides of the base flanges of the rails. The effect is obvious. The springs by their reaction against the tie draw the permanent lugs with force against the rail base, and as these lugs alternate on opposite sides of the bar at short distances apart, the effect is to hold the rails firmly to the ties and make a solid substantial superstructure, at the same time allowing the rails to expand and contract with summer's heat and winter's cold.

Further information may be obtained from the patentee at 209 W. Pratt Street, Baltimore, Md.

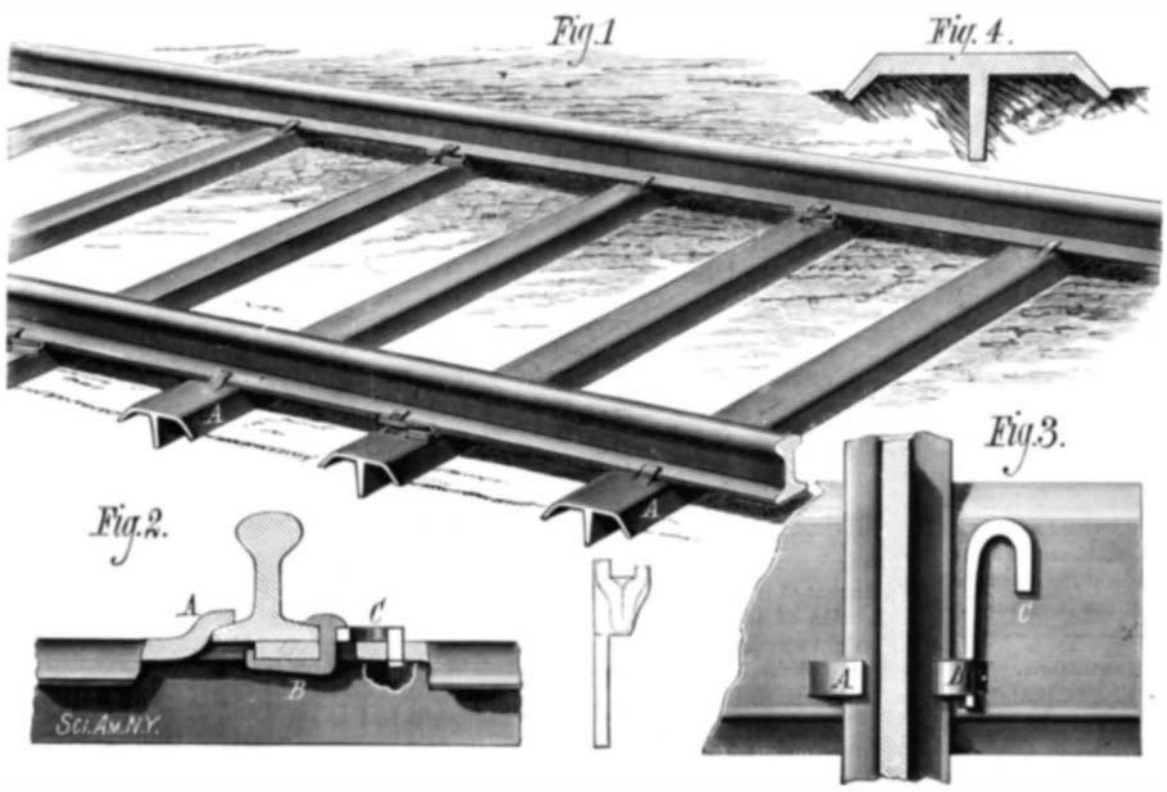

REESE'S RAILROAD TIE.

ENGINEERING INVENTIONS.

An improved governor for marine and other engines, in which the speed is controlled by centrifugal balls, has been patented by Mr. Samuel Whitney, of Wheeler, Ala. In this device a worm gear is acted upon by a pinion in such a way as to rotate the governor spindle when the engine runs normally, but when the speed is suddenly increased, it will lift the valve stem and check its engine.

A meter for measuring the amount of steam consumed for heating purposes in stores, houses, etc., has been patented by Mr. Joseph A. Cook, of Auburn, N. Y. It consists of a reservoir for receiving water, and a float placed in the reservoir and moved by the water, so as to operate a pair of arms that move the registering mechanism. The same inventor has patented a self-adjusting valve for regulating the pressure and supply of steam for heating purposes.

An improved railway gate, constructed so that it will be opened by an approaching train and held open until the train passes, has been patented by Messrs. Lewis C. Pope and Obed N. Tencher, of Paola, Kan.

Mr. Samuel G. Martin, of South Amboy, N. J., has recently secured two patents for steam steering apparatus for vessels. By the use of two separate piston heads, in a single cylinder, the rudder can be held centrally or to either side. For double-ended vessels two steam cylinders are used, and chains pass to both rudders from the pistons, so by the movement of the pistons the rudders will be turned.

Mr. Horatio Nelson, of New York city, has patented an improved enameled screw propeller which will not corrode, and works in the water with less friction than the ordinary wheels.

An improved balanced steam engine has been patented by Mr. James O. Baird, of Brooklyn, N. Y. This engine has three cylinders, with pistons working alternately upon diametrically opposite cranks. The engine is provided with a balanced steam valve of peculiar form.

An improved dynamometrical governor has been patented by Mr. Ernest A. Bourry, of St. Gallen, Switzerland. In this device, by suitable appliances, the variations of the power load, or resistance, are utilized directly to operate the throttle valve.

Mr. John L. Custer, of Bonaparte, Iowa, has devised a machine for excavating ditches to a true water line and finishing them for the laying of drain tile. The construction of the machine cannot be readily described without an engraving.

Mr. Paul S. Forbes, of New York city, has invented a steam boiler provided with serpentine fire flues, so arranged that their bends or coils may pass alternately through the upper part of the water space and the lower part of the steam space. It is said that with this construction steam will be generated faster and with less quantity of fuel than when boilers of the ordinary construction are used.

Mr John H. Fairbank, of McKeesport, Pa., has invented an improved balanced valve for steam engines. The advantages of this valve over others lie in its cheapness and simplicity, its fewer number of parts, and the ease with which it can be adjusted or loosened or tightened upon the valve seats.

An improved dredging apparatus has been patented by Mr. John Grant, of New Orleans, La. This invention is an improvement upon the dredging apparatus for which letters patent were granted to the same inventor, July 18, 1876. The present invention consists in a vertically adjustable deflecting plate extending throughout the broadside of

© 1879 SCIENTIFIC AMERICAN, INC