A NEW RIFLE-PROPELLED GRENADE.

Some interesting tests and experiments have been carried out in England with a new type of rifle grenade that has been recently invented by Mr. F. Marten Hale. This new missile was suggested to the inventor by the success that attended the use of hand-thrown grenades by the Japanese outside Port Arthur and in Manchuria for trench storming. In order to render such an arm of even greater utility and efficiency, he embarked upon a series of experiments toward the projection of the missile by means of the ordinary rifle. The scheme is similar to that embodied in Lieut.-Com. Davis's torpedo, recently described in these columns. It is possible by such weapon to discharge a shell from a protected position several hundred feet from the assaulted point, without any attendant exposure.

Mr. Hale has succeeded in evolving a design of such character that no injury whatever is inflicted upon the rifle, or its use interfered with when bayoneted.

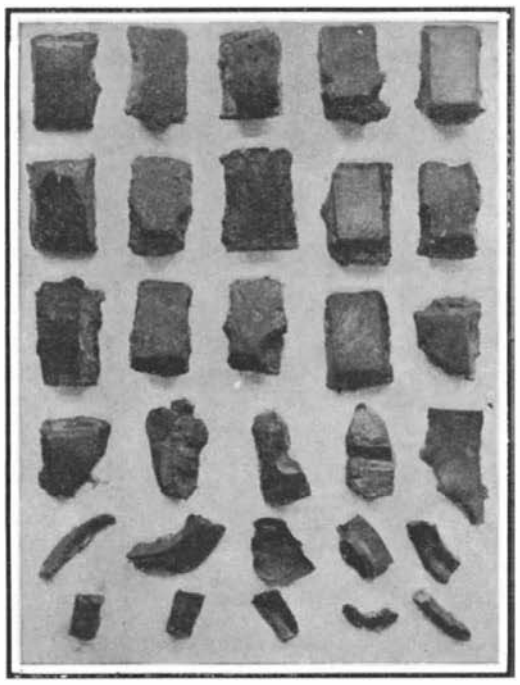

FRAGMENTATION OF GRENADE AFTER EXPLOSION.

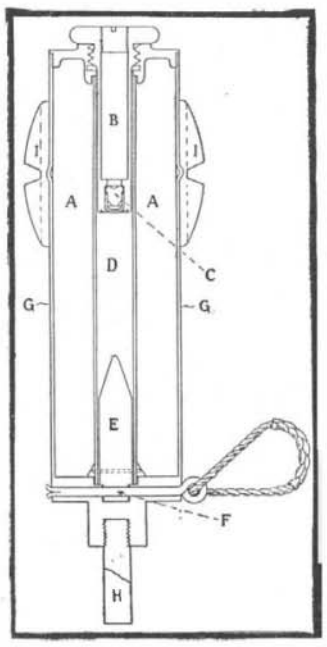

SECTION THROUGH THE RIFLE-PROPELLED GRENADE.

A GRENADE WHICH IS HURLED BY A RIFLE AND EXPLODED AT THE TARGET.

The accompanying illustrations will convey an idea of this new arm in use. In general appearance it resembles the ordinary pyrotechnic rocket with the head and tailpiece. The head or body is about 5 1/3 inches in length by approximately 1⅝ inches in diameter, made of stout brass tube. Into the bottom of the tube is screwed the tailpiece, which is about 9 inches long and which slides into the barrel of the rifle. The total weight of the grenade is approximately 22 ounces.

The central space of the casing *G* is hollow, and carries a tube *D*. Into the upper end of this tube is inserted the detonator *B*, secured in position by a milled head-nut. To the lower end of the detonator is attached the cap and anvil *C*, by means of which it is fired. The detonator itself is carried apart from the grenade in transport for safety, so that inadvertent explosion is impossible. The lower part of the hollow tube *D* carries the brass striker *E*, which, though sliding within the tube, is held in its position and prevented from creeping toward the detonator *B* during flight by the copper shearing wire shown. When the head of the grenade strikes the target this striker is released under the force of the impact, falls on the cap of the anvil *C*, and fires the detonator and the explosive charge *A*, carried in the annular space between the central hollow tube and the outer casing *G*. Passing through the base of the striker *E* is a copper safety pin with a cord loop attached. After the grenade has been fixed in the rifle barrel ready for discharge, the soldier gives the cord loop a pull, thus drawing out the safety pin, so that the striker is held in position by the copper shearing wire, as already described. The steel rod *H* fits closely in the barrel of the rifle, and also acts as tailpiece and balance to the grenade during its flight; moreover, it plays an important part in its propulsion. Around the external surface of the grenade casing, near the head, the steel shrapnel ring or weight *I*, serrated into 24 parts, is carried, which when the charge explodes, bursts into fragments flying in all directions. The explosive used is "tonite," equal to No. 1 dynamite. It embodies most of the high-explosive properties of compressed guncotton with the advantage that it can be exploded by an ordinary detonator without the use of dry primers. The explosive charge of the grenade weighs about 4 ounces.

With the elevation of the rifle at an angle of 30 degrees and using the British government blank cordite cartridge, the grenade can be thrown 450 feet. When a cartridge having a cordite charge of 45 grains instead of the regulation weight of 31.5 grains was used, the grenade was thrown 900 feet. The augmentation of the powder charge by approximately 50 per cent was found to inflict no ill effects upon the rifle, and ball cartridge could subsequently be used therewith with perfect success.

In carrying out experiments with the weapon, a hillock or mound was selected about 40 feet square and 10 feet in height, affording just such cover as that which an attacking party would use in a strategical forward movement upon a position. From the rear of this ridge a number of grenades were fired over the hillock, the range being such that they fell on low ground under the shelter of the opposite side of the ridge. The grenades fell and exploded with terrible effect, a large hole being torn in the ground where each grenade had struck the earth and exploded, while the fragments of the serrated weight ring were found scattered in all directions over a wide area.

For the purpose of demonstrating the havoc that would be wrought in this manner, a number of screens of brown paper measuring 6 feet in height by 8 feet in length were erected in the vicinity of the spot where the missiles fell. These were either blown down by the force of the concussion or torn to shreds and riddled by the flying fragments. In another test a pit was prepared, 6½ feet deep by 8 feet long and 3½ feet wide. It was lined with 12 inches of concrete covered by 1-inch planking. The top of the pit was closed with nine heavy timber balks measuring 4½ feet long by 10 inches wide and 5 inches thick. A grenade was then dropped into this pit by suitable means. The resultant explosion hurled the top timber balks bodily into the air for several feet, and threw them on one side. Subsequent examination of the walls of the pit showed them to have been easily penetrated and the concrete backing extensively damaged and pitted. Altogether, 19 out of the 24 fragments of the ring encircling the grenade were recovered, the average weight of each of which was 9 grammes, while other pieces numbering 31 in all were picked up from behind the planking which they had pierced, the total weight of the fragments secured being 157 grammes, the largest piece of which weighed 10.3 grammes and the smallest 0.22 gramme. The extent of the fragmentation together with the ease with which the 1-inch planking had been pierced, even by small pieces only weighing 0.22 gramme, combined with the violence with which the timber balks covering the pit were thrown into the air, testifies to the death-dealing potency of this new invention.

Though so widely and terribly destructive in itself, the grenade is perfectly harmless unless detonated. In the course of an action, should a grenade be pierced by a bullet, the result would be quite negative. Convincing proof of this was shown by firing ball point blank at the grenade. The bullet simply pierced the casing and smashed the explosive charge, not the slightest detonation or explosion of the charge resulting.

A TUNNEL-BORING MACHINE.

The accompanying illustration shows a machine which has been designed to bore a rock tunnel by chipping away the face of the rock with a number of pneumatic chisel-headed hammers, the hammers being so placed on the machine that when the holding mechanism upon which they are mounted is rotated, every part of the opposing face of the rock is covered by the chisel. The design is the joint work of Mr. E. F. Terry of the Terry & Tench Company, in this city, and Mr. O. S. Proctor, of Denver. The whole machine is mounted upon a two-wheel truck at the front and a four-wheel main truck at the rear, the rear truck running on a 22-inch gage track laid along the center line of the tunnel. Centrally between the track rails is a duplex rack rail, which is engaged by a spur gear mounted on the truck, by which the whole machine is carried forward against the work. The front truck is provided with conical wheels suited to running on the invert portion of the circular tunnel as excavated by the machine. The main frame consists of a 20-inch I-beam laid on its side, at the rear end of which is

(*Continued on page 22.*)

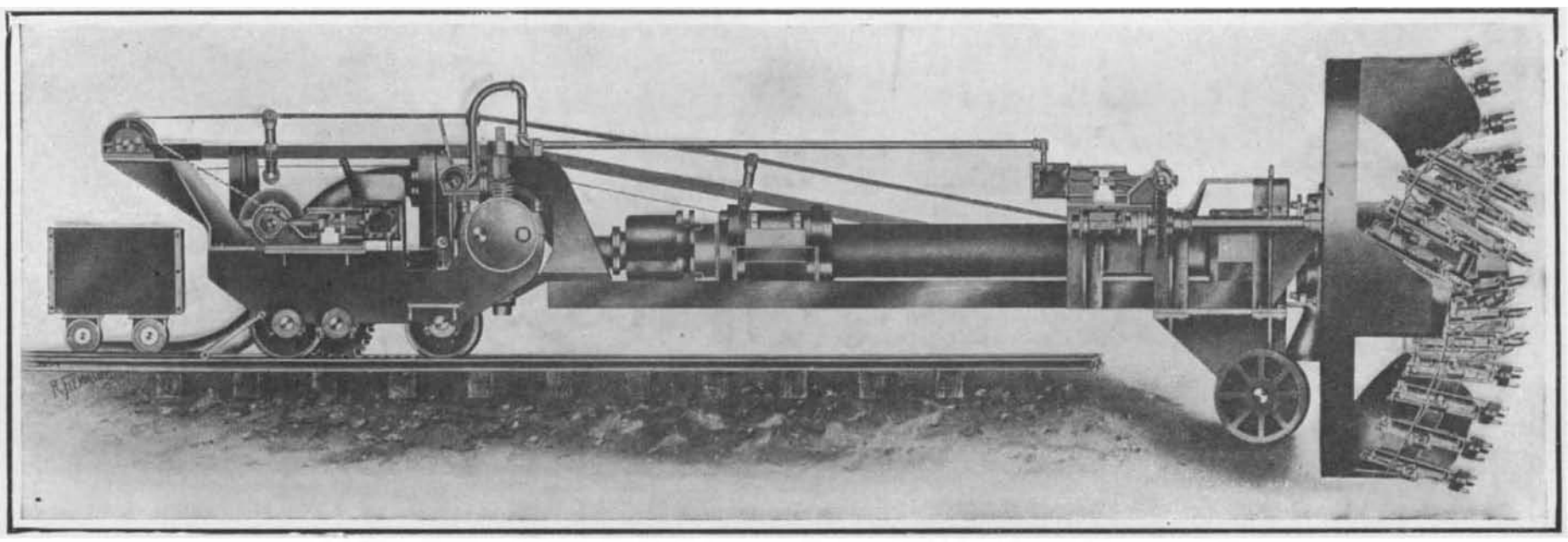

A TUNNEL-BORING MACHINE WHICH CAN DRIVE AN 8-FOOT TUNNEL IN ROCK WITHOUT BLASTING.

and biological chemistry and microscopy are applied. By the use of colored stains micro-organisms can be rendered visible under the microscope. Many forms of bacteria not otherwise to be observed will respond to different dyes with different effects. By various culture processes the bacteria themselves can be propagated for further study and experiment. After the bacterium of a disease is discovered and isolated, it can be propagated as desired, often in an attenuated form, so that a culture can be prepared and used for inoculation in order to render a person or an animal immune from the disease. Or from the blood of an animal thus inoculated a serum can be obtained, containing antitoxin or substances capable of neutralizing the toxins or poisonous substances produced in the blood by the bacteria. In this way the important science of serum therapy has developed. The antitoxin thus produced for diphtheria, for example, has greatly diminished the mortality from a disease once dreaded. A serum treatment for cerebro-spinal meningitis developed at the Rockefeller Institute promises likewise to be of the greatest usefulness in the cure of that malady.

The starting points in these researches are specimens from diseased patients. A culture of the bacteria is made, and then by inoculation the disease is communicated to some animal such as a mouse, guinea pig, or rabbit. The disease is then studied, it being possible of course to kill the animal at any stage and subject it to post-mortem examination and study, so that the exact progress of the disease may be learned and material obtained for further culture. A horse may be inoculated, and from its blood a serum rich in antitoxin obtained. The serum thus obtained is then tried on diseased animals. If a number of experiments are consistently successful through their entire range, the serum may be tried with human beings. Not every animal is suitable for every investigation. While certain are immune to some diseases, to others they will respond readily, so that an extensive number and variety must be maintained by the Institute. While under observation the animals receive as watchful care as human patients, and their weight, temperature, and other indications of their symptoms are duly observed and recorded.

Without taking up a specific investigation, it is of course impossible to refer in detail to methods or technique. From a large number of researches covering a wide field, it is somewhat difficult to select those whose importance would appear at once to the non-medical person. One of the earliest efforts of the Institute made in co-operation with the New York city Board of Health and various infant hospitals was a report on the results of milk feeding, in which the most wholesome condition of milk, and especially its freedom from injurious organisms, was determined. In fact, this was an important part of a general study which has put the New York Board of Health in a position thoroughly to safeguard the milk supply of the city, and the medical profession at large to understand most fully the proper condition of milk used in infant feeding, so that the infant mortality of the city is diminishing in a most gratifying manner. Another early study of the Institute dealt with dysentery and the conditions under which the disease is spread. Again, there has been the serum for meningitis, with which encouraging results already have been obtained, and the progress made on the study of the growth of cancer, a disease which has baffled efforts for its cure and relief.

An important work in biological chemistry has been undertaken with reference to the essential composition of albumen as a foundation for our knowledge of the physical basis of life. The production of spinal anæsthesia by magnesium sulphate injections has received practical application at the hands of surgeons for certain classes of operations, and has also been used to mitigate the spasms of lockjaw, and of contributing to the recovery of the patient. More recently, success has attended experiments dealing with the transplanting of various organs in different animals, which already has suggested the possibility of its wide human application.

For carrying on the work of the Institute, an efficient organization under the direction of Dr. Simon Flexner, formerly professor of pathology in the University of Pennsylvania, has been assembled. There are specially organized departments of pathology, bacteriology, physiological and pathological chemistry, physiology, pharmacology, comparative zoology, and experimental therapeutics each in charge of responsible heads aided by a number of assistants.

Taken all in all, the Rockefeller Institute, with its thorough organization and equipment, is a striking illustration of what an adequate endowment judiciously administered can accomplish for scientific research and the benefit of man.

Scientific investigation to-day must be productive of results which a discriminating but utilitarian public can appreciate. From medical laboratories have come such means for combating such diseases as diphtheria, cholera, yellow fever, and bubonic plague, to mention but a few whose consequences have been most appalling, so that it is not unreasonable to look for a career of constantly increasing usefulness for the Rockefeller Institute, whose work has been inaugurated so auspiciously.

A NOVEL CAMERA FOR MAKING MOVING PICTURES.

Numerous cameras have been invented for producing photographs of objects in motion upon an intermittent moving sensitized film, but none so far, we believe, have come into public notice wherein the film has a continuous movement from one spool to another behind a lens. The camera in the accompanying illustration has this latter feature, which renders it much more easy to operate and more simple in construction than is usual, and the basis of the exposure of the image on the moving film in an optical manner is quite novel and interesting. A single crank on one side of the box operates through suitable gears and belting the lower winding spool, which in turn draws the sensitized film from the upper roll over a guide roll downward through a feed tube in a constant continuous movement, while another gear meshing in a spiral spur rotates a longitudinal shaft, on the extreme left end of which is supported a revolving exposure disk.

On the flat side of this disk near its periphery is a transparent circular window, the axis of which coincides with the axis of the camera lens, the latter being rigidly secured to the front wall of the camera, and also is in line with the moving film behind. Within the circular aperture of the disk is a rotatable ring having sprocket teeth on the portion of its circumference extending laterally beyond the flat surface of the disk. Within this rotatable ring is secured a concavo-convex or negative cylindrical lens termed a refractor. At the rear of the camera lens combination is fixed a plano-convex or positive lens. Referring to the small illustration on the right, it will be noticed a stationary sprocket is fixed to the shaft bearing. A sprocket chain connects

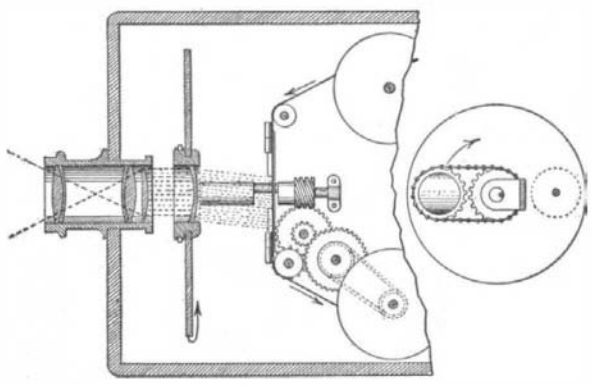

A SHUTTERLESS MOVING PICTURE CAMERA.

this sprocket with the movable ring sprocket on the rotating disk. The effect of this arrangement is to keep the transverse horizontal axis of the cylindrical lens in a horizontal position as the disk revolves. In the larger illustration the course of the rays of light from the object through the lens is shown. From the camera lens they are directed in a parallel direction by the single plano-convex lens and upon impinging on the movable cylindrical lens in the disk, while its direction is upward, are refracted downward with the same rapidity that the constantly moving film moves also downward, thereby impressing the image upon the film perfectly sharp and clear and always in register and line. The arrows show the lens in the disk moving upward while the film passes downward. At the same time by means of an eccentric pin on the main shaft a reciprocating frame adjacent to and in front of the film moves downward with the refractor rays as they strike the film and makes a distinct division line between each picture. Another device is provided at the top of the camera for indicating the number of feet of film that are used. The inventor, Mr. Joseph Bianchi, of Toronto, Canada, in explaining the operations of the camera, stated that he was able to secure good motion effects with eight impressions to the second on the moving film in place of sixteen, as usually required on cameras of the intermittent character. Positive strips made from the negative films are passed through any usual moving picture lantern with the stop interval between the pictures, and are more steady with less lateral displacement than is generally noticeable in films of the ordinary type. The camera is also very light to carry and is convenient to operate. It is a distinct advance in avoiding the usual delicate intermittent mechanism of cameras of this type.

The Current Supplement.

Prof. Reginald A. Fessenden opens the current Supplement, No. 1723, with a brief history of wireless telegraphy. Each year there are millions of cords of wood wasted in the forest and on the farm. F. B. Veitch explains how this waste wood may be practically utilized by destructive distillation, and by recovering the turpentine and other products with which it is charged. Sir William Ramsay places himself on record as having observed a phenomenon that indicates how radium's decay may be stopped. Dugald Clerk, the well-known authority on gas engines, discusses the problems of the motor car. The Brusio-Campocologna hydro-electric power plant is one of the largest and most up-to-date electric power generating and transmission systems of the world, a pressure of 50,000 volts being utilized to send the current to its destination. This electric installation is described by F. C. Perkins, and its chief features are illustrated. L. Delaunay contributes an article on "Matter and Ether," which explains the meaning of the terms. Dr. C. W. Michaelis writes on hardening hydraulic cements.

A TUNNEL-BORING MACHINE.

(*Concluded from page* 20.)

attached a yoke casting mounted adjustably on the rear truck. By means of two screws, one horizontal and the other vertical, this yoke is moved vertically or laterally, for the purpose of varying the adjustment of the frame in any direction of alignment or gradient. Above the frame, mounted in bearings at the front and rear ends of the I-beam, is a hollow, longitudinal driving shaft, which carries at its forward end the large circular head in which the drills are mounted. This drill head consists of a central hub, a casing, four connecting arms, and four bars to which the pneumatic hammers are fastened. The hammers are seated in a plane parallel to the axis. Upon three of the bars six hammers are mounted, and upon the fourth seven hammers, and they are so composed that as the head rotates, they cut along different overlapping circles and cover the face of the excavation. Steel plates fixed between the four groups of hammers are arranged to form pockets to catch and carry away the fragments of the rock as they are broken from the face of the wall. They discharge into a hopper at the rear of the rotating head, from which they are carried away by a conveyer leading to the rear end of the machine.

Air is led to the drills through the hollow driving shaft. At its rear end the shaft rotates in a stuffing box fitted in an air chamber carried on the rear truck of the machine.

The head is rotated by a compressed-air engine, carried on the forward part of the frame, the motion being communicated by a worm-wheel drive, which rotates a longitudinal shaft provided at its front end with a pinion. The pinion engages a gear, which is bolted to the rear case of the rotating head. The forward motion of the machine is secured by an air engine on the rear truck which, by means of a friction wheel and gear train, turns the feed gear, before mentioned as meshing with the rack laid between the rails on which the machine travels.

The machine which we illustrate is designed with a drill head 8 feet in diameter. If a full-sized tunnel of say 15 or 20 feet diameter were being driven to rock, the method adopted would be to drive an 8-foot heading with the boring machine, and then break down the rock, until the full sections were secured, by the usual process of drilling and blasting.

As to the capacity of the machine and the cost of operation, the designers estimate that it will be capable of removing 5,000 cubic feet of rock per day, and that $300 per day will be sufficient to meet all the expenses incident to the operation of an 8-foot machine. While testing the cutting elements in the shops, one of them cut a strip across the face of a granite rock 4 inches wide, 4 feet 4 inches long, and 1 inch deep, in one minute. This is equivalent to driving an 8-foot tunnel 72 linear feet in 20 hours, by the use of twenty-five of the pneumatic cutting hammers, which is the number mounted in the machine which we illustrate.

A rock tunneling machine has been the dream of many inventors for a long time, and many and various have been the mechanisms devised. When it is considered that the ordinary compressed-air drill, which represents a survival of the fittest in rock-drilling methods, at least as regards endurance, requires 5 to 10 horse-power and an average of six changes of the drill bit in cutting a hole six feet long of an average diameter of two inches, not to mention rapid wear and frequent breakage in the machine itself, and that in many kinds of rock one such hole per hour is considered good work, the nature of the problem of building a machine to cut away roughly a thousand times as much rock nearly half as fast (which is what the manufacturers claim for their machine) will be appreciated.

Taking into consideration the time lost in adjusting an air drill for each hole drilled and in making a new "set up" of column, tripod, or stretcher bar for every few holes, all of which the tunneling machine will eliminate, the work done by this machine will be something like two hundred times that of an ordinary air drill; and if it will really "stand up" in practice and do that work with about one-tenth of the proportionate power of the air drill and no greater delay due to wear and breakage, the economies effected will be obviously immense, and the achievement is indeed a great one.